BOLYMIN

# BF9864A

## Feature

1. FSTN Transflective LCD, COF package
2. Built-in driver PCF8548, serial I2C data bus
3. 1/64 duty cycle
4. +3V power supply
5. With FPC and ZIF connector
6. Option: EL Backlight, LED Backlight

## Mechanical Data

| Item | Standard Value | Unit |
|---|---|---|
| LCD Dimension | 34.0 x28.0 | mm |
| Viewing Area | 31.0 x22.5 | mm |
| Dot Size | 0.26x0.31 | mm |
| Dot Pitch | 0.28 x 0.33 | mm |

## Pin Assignment

| Pin | Symbol | Function |
|---|---|---|
| 1 | Vlcd | LCD power supply |
| 2 | Vss1,2 | Negative power supply rails |
| 3 | Vss1,2 | Negative power supply rails |
| 4 | SCL | I2C bus serial clock signal input |
| 5 | SD | I2C bus data lines |
| 6 | RES | Device reset signal |
| 7 | Vdd2,3 | Positive power supply rails |
| 8 | Vdd1 | Positive power supply rails |

## Electronic Characteristics

| | Symbol | Condition | Typical Value | Unit |
|---|---|---|---|---|
| Input Voltage | Vdd | Vdd =+3V | 3.0 | V |
| Supply Current | Idd | Vdd =+3V | 0.2 | mA |
| LCD Driving Voltage | Vlcd-Vss | 25°C | 8.2 | V |

## Dimension

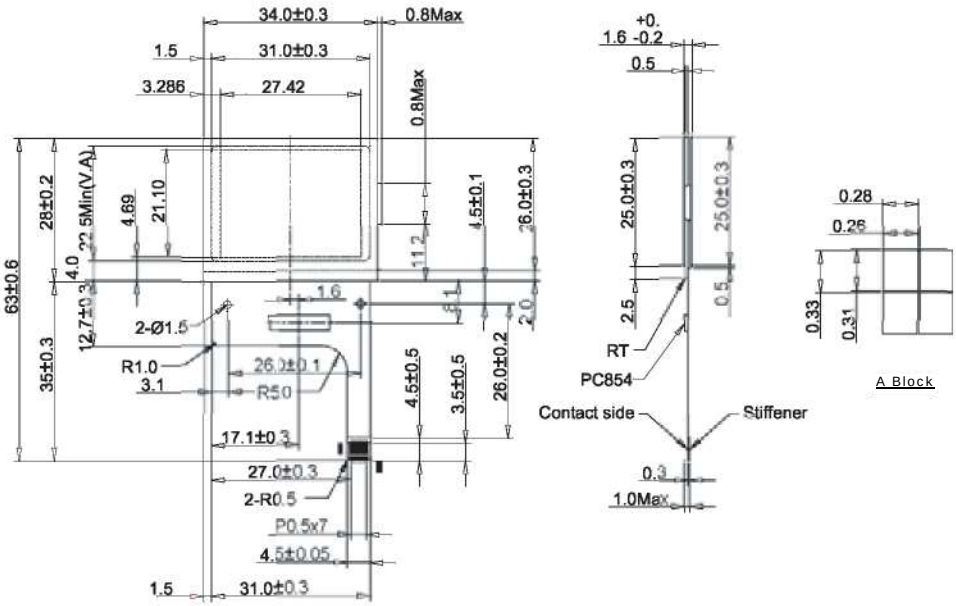

# LCD MODULE SPECIFICATION

## MODEL NO.

## BF9864A series

FOR MESSRS:

_____

ON DATE OF:

_____

APPROVED BY:

_____

**C O N T E N T S**

1. Numbering System

2. General Specification

3. Absolute Maximum Ratings

4. Electrical Characteristics

5. Interface Description

6. Backlight information

7. Block Diagram

8. Timing Characteristics

9. Quality

10. Reliability

11. Handling Precautions

12. Drawing (Outline Dimension)

## 1. Numbering System

| | | | | | | | | | |
|---|---|---|---|---|---|---|---|---|---|
| **B** | **F** | **9864** | | **A** | **F** | **P** | **E** | **H** | **xxx** |
| **0** | **1** | **2** | | **3** | **4** | **5** | **6** | **7** | **8** | **9** |

| | | | | |
|---|---|---|---|---|
| **0** | Brand | | Bolymin | |
| **1** | Module Type | | C= character type<br>G= graphic type<br>P= TAB/TCP type | O= COG type<br>F= COF type |
| **2** | Format | | 2002=20 characters, 4 lines<br>12232= 122 x 32 dots | |
| **3** | Version No. | | A type | |
| **4** | LCD Color | | G=STN/gray<br>Y=STN/yellow-green<br>C=color STN | B=STN/blue<br>F=FSTN<br>T=TN |
| **5** | LCD Type | | R=positive/reflective<br>P=positive/transflective | M=positive/transmissive<br>N=negative/transmissive |
| **6** | Backlight type/color | | L=LED array/ yellow-green<br>H=LED edge/white<br>R=LED array/red<br>G=LED edge/yellow-green | D=LED edge/blue<br>E=EL/white<br>B=EL/blue<br>C=CCFL/white |
| **7** | CGRAM Font (applied only on character type) | | J=English/Japanese Font<br>E=English/European Font | C=English/Cyrillic Font<br>H=English/Hebrew Font |
| **8** | View Angle/ Operating Temperature | | B=Bottom/Normal Temperature<br>H=Bottom/Wide Temperature<br>U=Bottom/Ultra wide Temperature | T=Top/Normal Temperature<br>W=Top/Wide Temperature<br>C=9H/Normal Temperature |
| **9** | Special Code | | 3=3 volt logic power supply<br>n=negative voltage for LCD<br>c=cable/connector<br>xxx=to be assigned on data sheet | t=temperature compensation for LCD<br>p=touch panel |

## 2. General Specification

(1) Mechanical Dimension

| Item | Standard Value | Unit |
|---|---|---|
| Number of dots | 98 X 64 | dots |
| Module Size<br>(W x H x T) | 35.5*28.0*2.3max-EL B/L<br>34.0 x 28.0 x 1.6max-No B/L<br>36.2 x 30.2 x 4.0 max –Led B/L | mm |
| View area | 31.0(W) X 22.5(H) | mm |
| Dot size | 0.268W) X 0.318(H) | mm |
| Dot pitch | 0.28(W) X 0.33(H) | mm |

(2) Controller IC: PCF8548 Controller

(3) Temperature Range

| | Normal | Wide |
|---|---|---|
| Operating | 0 ~+50℃ | -20 ~ +70℃ |
| Storage | -10 ~ +60℃ | -40 ~ +85℃ |

## 3. Absolute Maximum Ratings

| Item | Symbol | Min | Typ | Max | Unit |
|---|---|---|---|---|---|
| Supply Voltage For Logic | $V_{DD}$-$V_{SS}$ | -0.5 | — | 6.5 | V |
| Supply Voltage For LCD | $V_{LCD}$ | 0 | — | 16.0 | V |
| Input Voltage | $V_I$ | -0.3 | — | $V_{DD}$+0.3 | V |
| Operating Temperature | $T_{OP}$ | -20 | — | +70 | ℃ |
| Storage Temperature | $T_{STG}$ | -30 | — | +85 | ℃ |

## 4. Electrical Characteristics

| Parameter | Symbol | Condition | Min | Typ | Max | Unit | Note |
|---|---|---|---|---|---|---|---|
| **----- Electronic Characteristics -----** | | | | | | | |
| Logic Circuit Supply Voltage | $V_{DD}$-$V_{SS}$ | -- | 2.7 | 3.0 | 5.5 | V | |
| LCD Driving Voltage | $V_{LCD}$ | -20 °C | -- | 9.2 | -- | V | * It should be defined by real design. |
| | | 25 °C | -- | **8.2** | -- | | |
| | | +70 °C | -- | 7.2 | -- | | |
| Input Voltage | $V_{IH}$ | -- | 0.7 $V_{DD}$ | -- | $V_{DD}$ | V | |
| | $V_{IL}$ | -- | 0 | -- | 0.3 $V_{DD}$ | V | |
| Logic Supply Current | $I_{DD}$ | $V_{DD}$ = 5V | -- | 0.3 | -- | mA | |
| **----- Optical Characteristics -----** | | | | | | | |
| Contrast | CR | -20 °C | -- | 1.7* | -- | | Note 1<br>* It should be defined by real design. |
| | | 25 °C | -- | 8* | -- | | |
| | | 70 °C | -- | 4.6* | -- | | |
| Rise Time | tr | -20 °C | -- | 2100* | -- | ms | Note 2<br>* It should be defined by real design. |
| | | 25 °C | -- | 150* | -- | | |
| | | 70 °C | -- | 50* | -- | | |
| Fall Time | tf | -20 °C | -- | 5500* | -- | ms | |
| | | 25 °C | -- | 250* | -- | | |
| | | 70 °C | -- | 65* | -- | | |
| Viewing Angle Range | θ f | 25°C & CR≥2 | -- | 40 | -- | Deg. | Note 3 |
| | θ b | | -- | 30 | -- | | |
| | θ l | | -- | 35 | -- | | |
| | θ r | | -- | 35 | -- | | |
| Frame Frequency | fF | 25°C | -- | 64 | -- | Hz | |

(NOTE 1) Contrast ratio :

CR = (Brightness in OFF state) / (Brightness in ON state)

( NOTE 2 ) Response time :

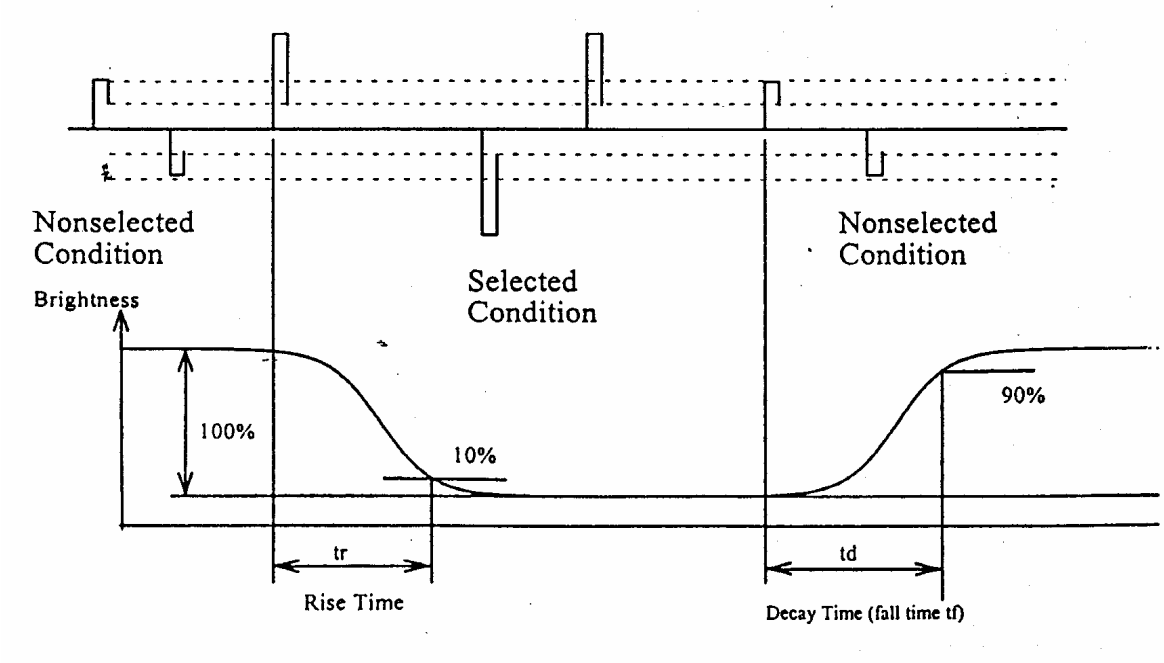


(NOTE 3) Viewing angle

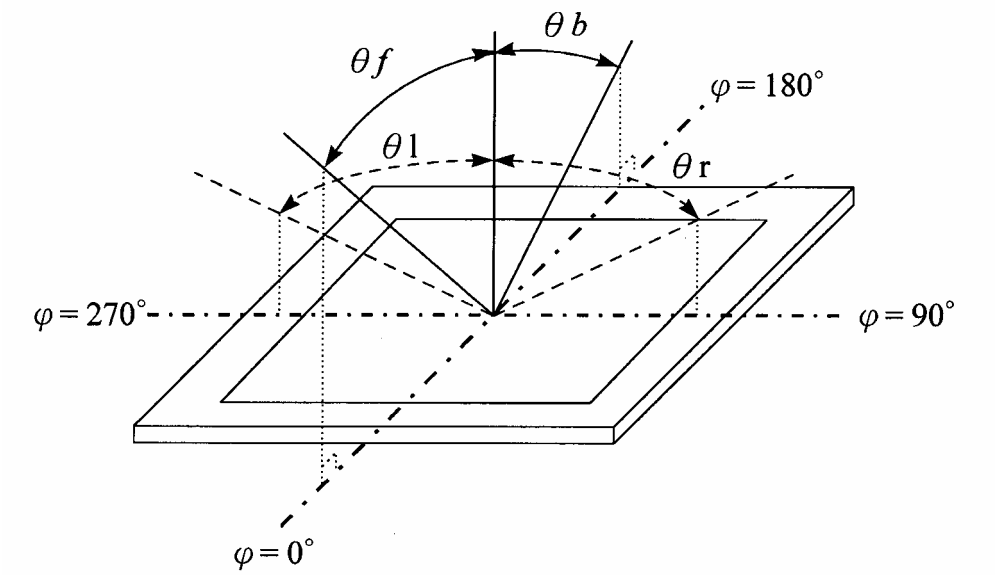

## 5. Interface Pin Function

| No. | Symbol | Function |
|---|---|---|
| 1 | $V_{LCD}$ | LCD power supply |
| 2 | $V_{SS1}$,$V_{SS2}$ | Logic ground 0V |
| 3 | $V_{SS1}$,$V_{SS2}$ | Logic ground 0V |
| 4 | SCL | $I^2C$-bus Serial clock signal input |
| 5 | SD | $I^2C$-bus data lines |
| 6 | RES | This signal is used to rest the device. This signal is active Low. |
| 7 | $V_{DD}$ | Positive power supply |
| 8 | $V_{DD}$ | Positive power supply |

## 6. Backlight Information

(1) EL /White( blue)

| Parameter | Symbol | Min | Typ | Max | Unit | Test Condition |
|---|---|---|---|---|---|---|
| Voltage | Vrms | -- | 110 (AC) | | V | |
| Frequency | HZ | -- | 400 | | Hz | |
| Brightness*(Measu -re on LCD) | $cd/m^2$ | 5 | 10 | | cd/m2 | 110Vrms 400Hz |
| CIE Chromaticity Diagram | X | -- | 0.2901white 0.182 blue | | -- | |
| | Y | -- | 0.3608 white 0.46 blue | | -- | |
| Current Dissipation | $mA/cm^2$ | -- | 1.33 | | mA | |
| Power Dissipation | $mW/cm^2$ | -- | 26.29 | | mW | |
| Color | White(Blue) | | | | | |

(2) LED edge/white

| Parameter | Symbol | Min | Typ | Max | Unit | Test Condition |
|---|---|---|---|---|---|---|
| Supply Current | ILED | — | 20 | 25 | mA | V=3.2V |
| Supply Voltage | V | — | 3.2 | 3.4 | V | |
| Reverse Voltage | VR | — | — | 5 | V | |
| Luminous Intensity | IV | 15 | — | — | $cd/m^2$ | ILED=20mA |
| Life Time | | — | 15000 | — | Hr. | V≦3.2V |
| Color | White | | | | | |

6.2 Backlight driving methods

E/L B/L driven from PINS of EL backlight directly

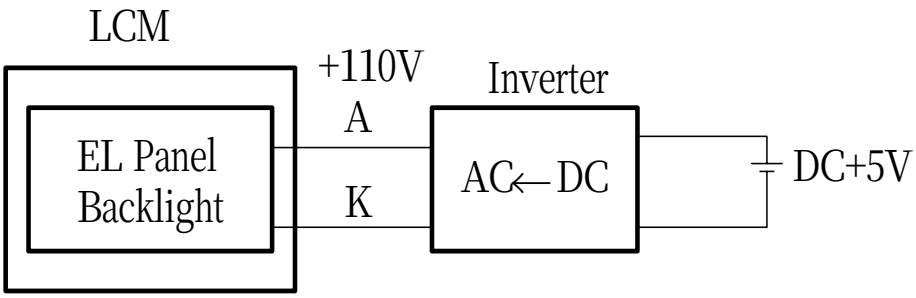


**LED B/L driven from PINS of LED backlight directly**

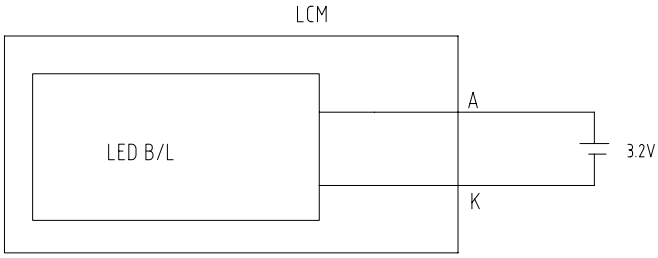

## 7. Block Diagram

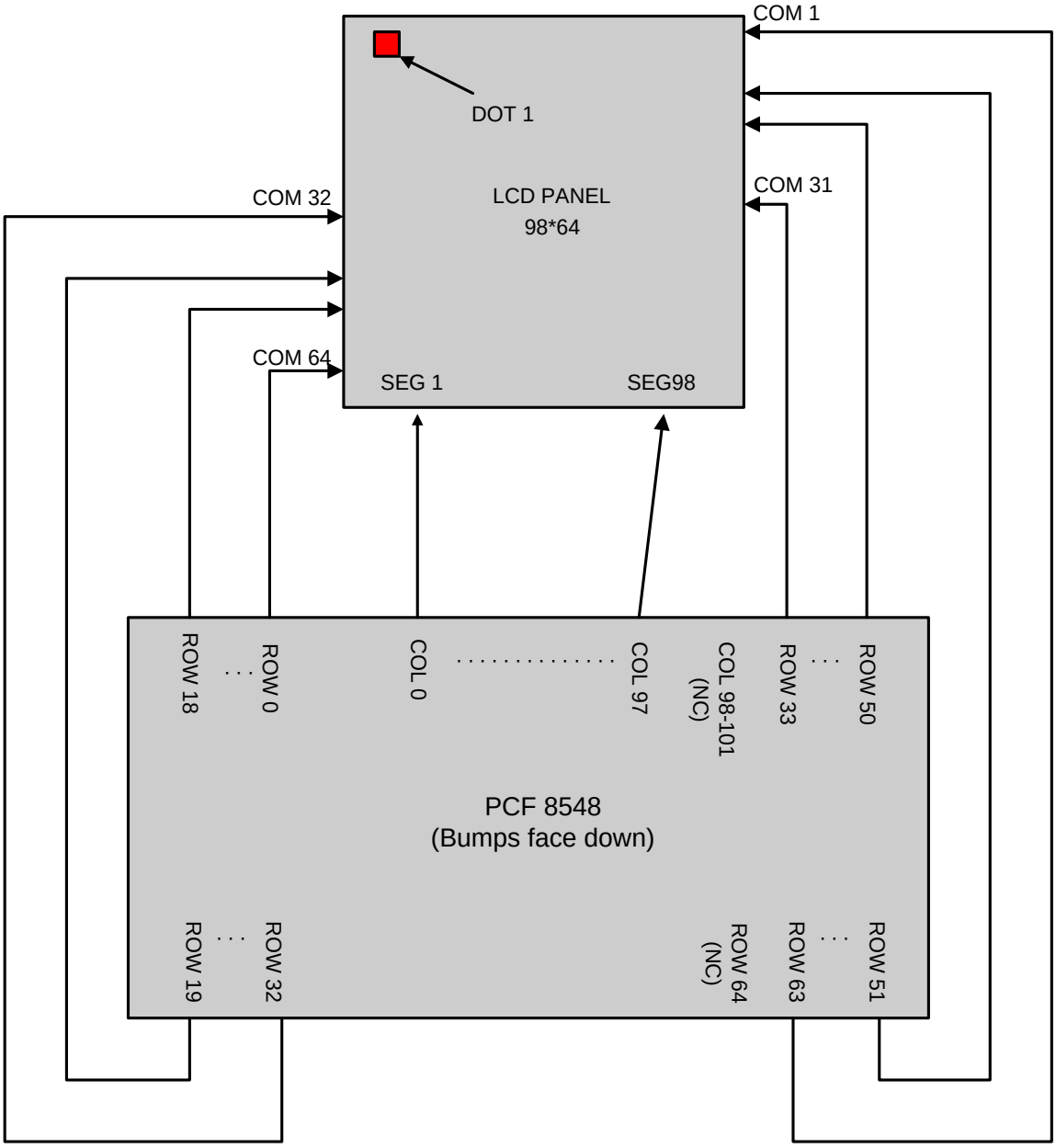


**Display Configuration Setting :**

**MX=0 MY=1**

**BRS=1 TRS=0**

## 8. Timing Characteristics

$V_{DD1}$ = 1.9 to 5.5 V; $V_{DD2}$ and $V_{DD3}$ = 2.4 to 4.5 V; $V_{SS1}$ and $V_{SS2}$ = 0 V; $V_{LCD}$ = 4.5 to 9 V; $T_{amb}$ = –40 to +85 °C; unless otherwise specified.

| SYMBOL | PARAMETER | CONDITIONS | MIN. | TYP. | MAX. | UNIT |
|---|---|---|---|---|---|---|
| $f_{OSC}$ | oscillator frequency | $V_{DD1}$ = 2.8 V; $T_{amb}$ = –20 to +70 °C | 20 | 38 | 70 | kHz |
| $f_{clk(ext)}$ | external clock frequency | | 20 | 38 | 100 | kHz |
| $f_{frame}$ | frame frequency | $f_{OSC}$ or $f_{clk(ext)}$ = 38 kHz; note 1 | – | 73 | – | Hz |
| $t_{VHRL}$ | $V_{DD1}$ to $\overline{RES}$ LOW | see Fig.17 and note 2 | 0 | – | 1 | µs |
| $t_{W(RES)}$ | $\overline{RES}$ LOW pulse width | see Fig.17 and note 3 | 100 | – | – | ns |
| **I²C-bus timing characteristics**;see note 4 | | | | | | |
| $f_{SCLK}$ | SCL clock frequency | | 0 | – | 400 | kHz |
| $t_{SCLL}$ | SCL clock LOW period | | 1.3 | – | – | µs |
| $t_{SCLH}$ | SCL clock HIGH period | | 0.6 | – | – | µs |
| $t_{SU;DAT}$ | data set-up time | | 100 | – | – | ns |
| $t_{HD;DAT}$ | data hold time | | 0 | – | 0.9 | µs |
| $t_r$ | SCL and SDA rise time | note 5 | 20 + 0.1$C_b$ | – | 300 | ns |
| $t_f$ | SCL and SDA fall time | note 5 | 20 + 0.1$C_b$ | – | 300 | ns |
| $t_{f(SDA)(ro)}$ | SDA fall time for read out | $V_{DD1}$ = <3.6 V | 20 + 0.1$C_b$ | – | 1000 | ns |
| $C_b$ | capacitive load represented by each bus line | | – | – | 400 | pF |
| $t_{SU;STA}$ | set-up time for a repeated START condition | | 0.6 | – | – | µs |
| $t_{HD;STA}$ | START condition hold time | | 0.6 | – | – | µs |
| $t_{SU;STO}$ | set-up time for STOP condition | | 0.6 | – | – | µs |
| $t_{SW}$ | tolerable spike width on bus | note 6 | – | – | 50 | ns |
| $t_{BUF}$ | bus free time between a STOP and START condition | | 1.3 | – | – | µs |

**Notes**

1. $f_{frame} = \frac{f_{clk(ext)}}{520}$
2. $\overline{RES}$ may be LOW before $V_{DD1}$ goes HIGH.
3. If $t_{W(RES)}$ is longer than 3 ns (typical) a reset may be generated.
4. All timing values are valid within the operating supply voltage and ambient temperature ranges and are referenced to $V_{IL}$ and $V_{IH}$ with an input voltage swing of $V_{SS}$ to $V_{DD}$.
5. The rise and fall times specified here refer to the driver device (i.e. not PCF8548) and are part of the general fast I²C-bus specification. When PCF8548 asserts an acknowledge on SDA, the minimum fall time is 10 ns. $C_b$ = capacitive load per bus line.
6. The device inputs SDA and SCL are filtered and will reject spikes on the bus lines of width $\leq t_{SW(max)}$.

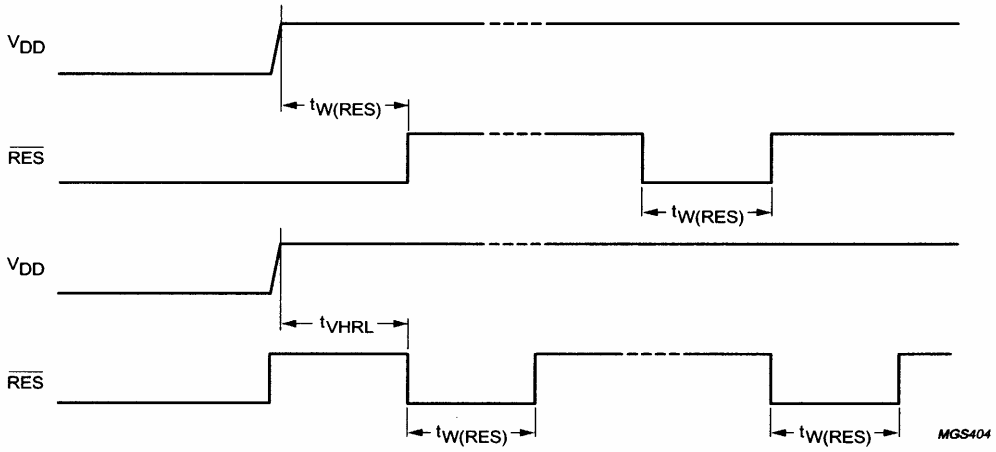


Fig.17 Reset timing.

## 9. Quality

9-1Test Conditions

Tests should be conducted under the following conditions :

Ambient temperature : 25 ± 5°C

Humidity : 60 ± 25% RH.

9-2 Sampling Plan

Sampling method shall be in accordance with MIL-STD-105E , level II, normal single sampling plan .

9-3 Acceptable Quality Level

A major defect is defined as one that could cause failure to or materially reduce the usability of the unit for its intended purpose. A minor defect is one that does not materially reduce the usability of the unit for its intended purpose or is an infringement from established standards and has no significant bearing on its effective use or operation.

9-4 Appearance

An appearance test should be conducted by human sight at approximately 30 cm distance from the LCD module under flourescent light. The inspection area of LCD panel shall be within the range of following limits.

9-5 Inspection Quality Criteria

| Item | Description of defects | | | Class of Defects | Acceptable level (%) |
|---|---|---|---|---|---|
| Function | Short circuit or Pattern cut | | | Major | 0.65 |
| Dimension | Deviation from drawings | | | Major | 1.5 |
| Black spots | Ave . dia . D | area A | area B | Minor | 2.5 |
| | D≤0.2 | Disregard | | | |
| | 0.2<D≤0.3 | 3 | 4 | | |
| | 0.3<D≤0.4 | 2 | 3 | | |
| | 0.4<D | 0 | 1 | | |
| Black lines | Width W, Length L | A | B | Minor | 2.5 |
| | W≤0.03 | disregard | | | |
| | 0.03<W≤0.05 | 3 | 4 | | |
| | 0.05<W≤0.07 , L≤3.0 | 1 | 1 | | |
| | See line criteria | | | | |
| Bubbles in polarizer | Average diameter D 0.2 < D < 0.5 mm for N = 4 , D > 0.5 for N = 1 | | | Minor | 2.5 |
| Color uniformity | Rainbow color or newton ring. | | | Minor | 2.5 |
| Glass Scratches | Obvious visible damage. | | | Minor | 2.5 |
| Contrast ratio | See note 1 | | | Minor | 2.5 |
| Response time | See note 2 | | | Minor | 2.5 |
| Viewing angle | See note 3 | | | Minor | 2.5 |

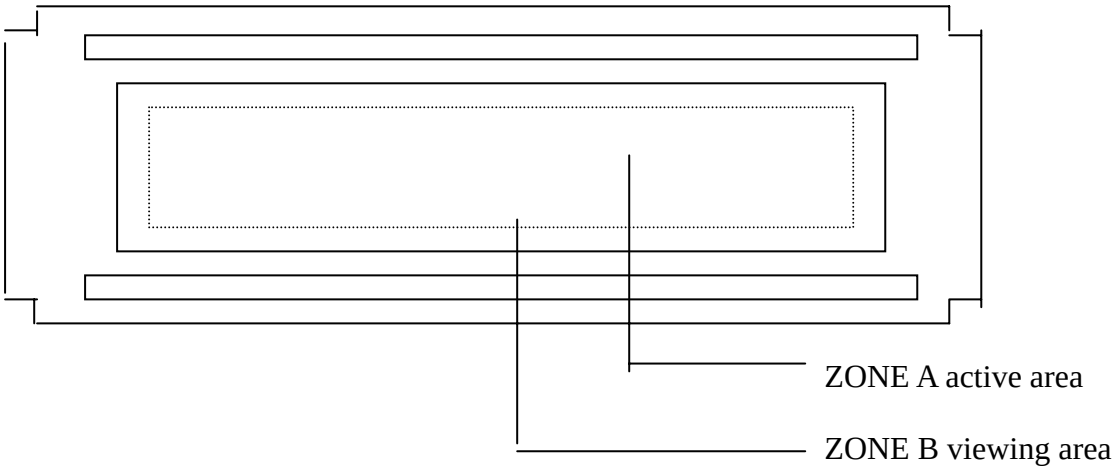

## 10. Reliability

| Test Item | Test Conditions | Note |
|---|---|---|
| High Temperature Operation | 70±3°C , t=96 hrs | |
| Low Temperature Operation | -20±3°C , t=96 hrs | |
| High Temperature Storage | 80±3°C , t=96 hrs | 1,2 |
| Low Temperature Storage | -30±3°C , t=96 hrs | 1,2 |
| Thermal Shock Test | -30°C ~ 25°C ~ 80°C<br>30 min. 5 min. 30 min. ( 1 cycle )<br>Total 5 cycle | 1,2 |
| Vibration Test (Packing) | Sweep frequency：10~55~10 Hz/1min<br>Amplitude : 0.75mm<br>Test direction : X.Y.Z/3 axis<br>Duration : 30min/each axis | 2 |

Note 1 : Condensation of water is not permitted on the module.

Note 2 : The module should be inspected after 1 hour storage in normal conditions (15-35°C , 45-65%RH).

Definitions of life end point :

- Current drain should be smaller than the specific value.
- Function of the module should be maintained.
- Appearance and display quality should not have degraded noticeably.
- Contrast ratio should be greater than 50% of the initial value.

**11. Handling Precautions**

(1) An LCD module is a fragile item and should not be subjected to strong mechanical shocks.

(2) Avoid applying pressure to the module surface. This will distort the glass and cause a change in colour.

(3) Under no circumstances should the position of the bezel tabs or their shape be modified.

(4) Do not modify the display PCB in either shape or positioning of components.

(5) Do not modify or move location of the zebra or heat seal connectors.

(6) The device should only be soldered to during interfacing. Modification to other areas of the board should not be carried out.

(7) In the event of LCD breakage and resultant leakage of fluid do not inhale, ingest or make contact with the skin. If contact is made rinse immediately.

(8) When cleaning the module use a soft damp cloth with a mild solvent, such as Isopropyl or Ethyl alcohol. The use of water, ketone or aromatic is not permitted.

(9) Prior to initial power up input signals should not be applied.

(10) Protect the module against static electricity and observe appropriate anti-static precautions.

## 12. Drawing (Outline Dimension )

EL backlight

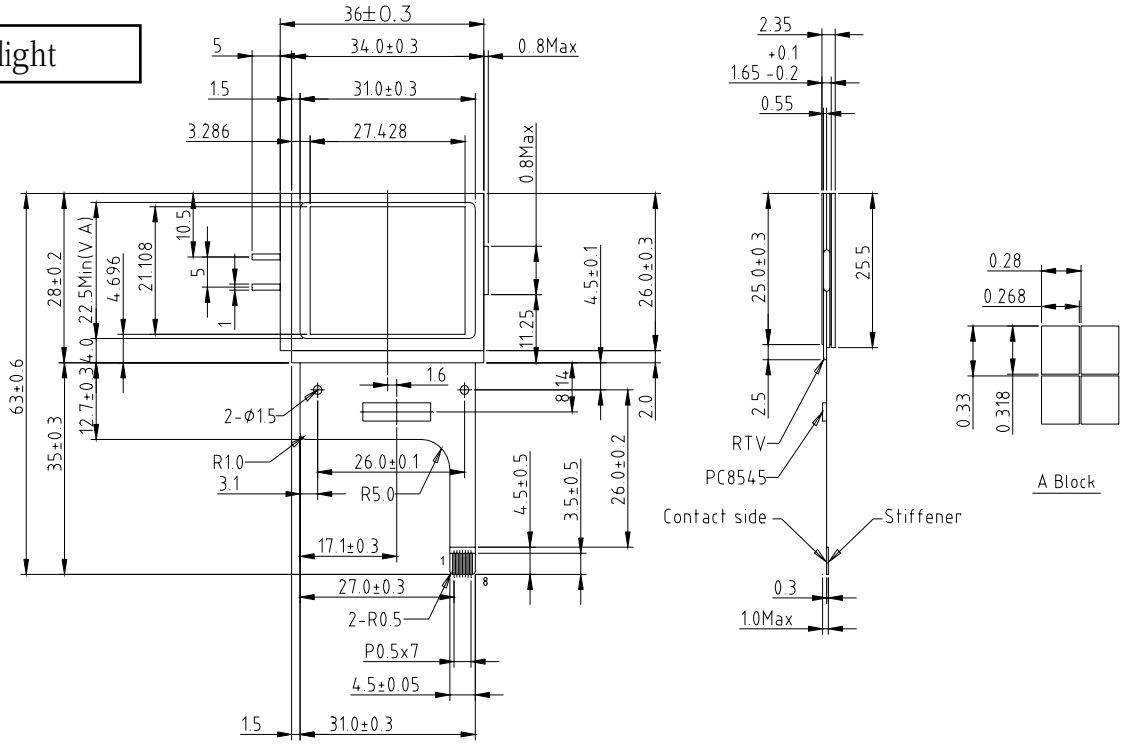

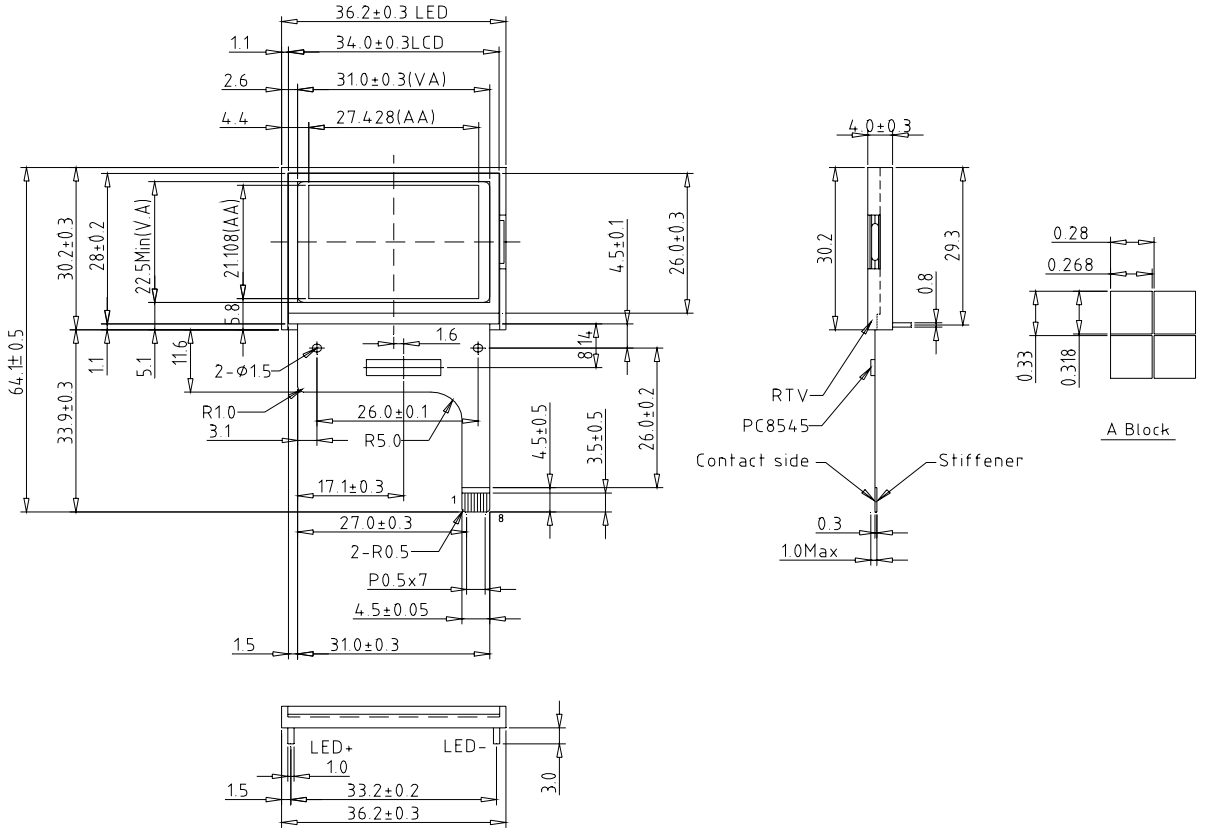
LED/white backlight